NARASARAOPETA ENGINEERING COLLEGE (AUTONOMOUS)

R23

I B.Tech I Semester Supple. Examinations, May-2026

Sub Code: R23CC1101 **LINEAR ALGEBRA & CALCULUS**

Time: 3 hours (Common to All Branches) Max. Marks: 70

Note: Question Paper consists of Two parts (Part-A and Part-B)

PART-A: Answering all the questions from Part-A is compulsory (10 x 2M = 20M)

Q.No		Questions	KL	CO	M
1	a	Find the value of k such that the rank of $\begin{bmatrix} 1 & 2 & 3 \\ 2 & k & 7 \\ 3 & 6 & 10 \end{bmatrix}$ is 2.	K3	1	2M
	b	Write the working rule for finding the inverse of a matrix by Gauss-Jordan method.	K2	1	2M
	c	Find the characteristic roots of the matrix $\begin{bmatrix} 1 & 4 \\ 2 & 3 \end{bmatrix}$.	K3	2	2M
	d	Express the following quadratic form in matrix notation $2x^2 + 3y^2 - 5z^2 - 2xy + 6xz - 10yz$	K3	2	2M
	e	State Rolle's theorem.	K2	3	2M
	f	Write the expansion of the function $y = e^x$.	K3	3	2M
	g	State Euler's theorem for the function of two variables.	K2	4	2M
	h	If $y \log(\cos x) = x \log(\sin y)$, find $\frac{dy}{dx}$.	K3	4	2M
	i	Evaluate $\int_0^3 \int_0^1 (x^2 + 3y^2)\,dy\,dx$.	K3	5	2M
	j	Change the order of integration $\int_0^\infty \int_0^x f(x, y)\,dy\,dx$.	K3	5	2M

PART-B

Answer either 'a' or 'b' from each question of **PART-B** (5 x 10M = 50M)

Q.No		Questions	KL	CO	M
2		Unit-I			
	a	i) Determine the rank of the matrix using echelon form $\begin{bmatrix} -2 & -1 & -3 & -1 \\ 1 & 2 & 3 & -1 \\ 1 & 0 & 1 & 1 \\ 0 & 1 & 1 & -1 \end{bmatrix}$	K3	1	5M
		ii) Solve the system of equations $3x + y + 2z = 3$, $2x - 3y - z = -3$; $x + 2y + z = 4$ using Gauss elimination method.	K3	1	5M
		OR			
	b	Test for consistency and hence solve the system: $x + y + z = 6$; $x - y + 2z = 5$; $3x + y + z = 8$; $2x - 2y + 3z = 7$.	K3	1	10M
3		Unit-II			

		Verify the Cayley-Hamilton theorem for the matrix $\begin{bmatrix} 1 & 3 & 7 \\ 4 & 2 & 3 \\ 1 & 2 & 1 \end{bmatrix}$.	K3	2	10M
		OR			
	b	Reduce the quadratic from $2x^2 + y^2 + z^2 + 2xy - 2xz - 4yz$ to canonical form by the orthogonal transformation. Also find the rank, index, signature and nature of the quadratic form.	K3	2	10M
4		Unit-III			
	a	i) Verify the Lagrange's mean value theorem for the function f(x) = (x - 1)(x - 2)(x – 3) in [0, 4].	K3	3	5M
		ii)Verify the Cauchy's mean value theorem for the following functions: $f(x) = e^x$, $g(x) = e^{-x}$ in [a, b]	K3	3	5M
		OR			
	b	i) Obtain the Maclaurin's expansion of the following function log sec x.	K3	3	5M
		ii) Prove by Taylor's theorem that, for x > 0, $x - \frac{x^3}{6} < \sin x < x - \frac{x^3}{6} + \frac{x^5}{120}$.	K3	3	5M
5		Unit-IV			
	a	i) If $u = \frac{1}{\sqrt{x^2 + y^2 + z^2}}$, find the value of $\frac{\partial^2 u}{\partial x^2} + \frac{\partial^2 u}{\partial y^2} + \frac{\partial^2 u}{\partial z^2}$.	K3	4	5M
		ii) Show that the rectangular solid of maximum volume that can be inscribed in a sphere is a cube.	K3	4	5M
		OR			
	b	i) If $u(x, y) = \frac{x^2 + y^2}{x + y}$, then show that $\left(\frac{\partial u}{\partial x} - \frac{\partial u}{\partial y}\right)^2 = 4\left(1 - \frac{\partial u}{\partial x} - \frac{\partial u}{\partial y}\right)$.	K3	4	5M
		ii) Show that $f(x, y) = x^3 + y^3 - 3xy + 1$ is minimum at the point (1, 1).	K3	4	5M
6		Unit-V			
	a	i) Evaluate $\int_0^3 \int_1^{\sqrt{4-y}} (x + y)\,dx\,dy$ by changing the order of integration.	K3	5	5M
		ii) Find the volume bounded by the cylinder $x^2 + y^2 = a^2$ and the planes y + z = c and z = 0.	K3	5	5M
		OR			
	b	i) Evaluate $\int_A xy(x + y)\,dA$, where A is the area bounded between the parabola $y = x^2$ and the line y = x.	K3	5	5M
		ii) Evaluate $\int_0^1 \int_0^{1-x} \int_0^{1-x-y} \frac{1}{(x + y + z + 1)^3}\,dx\,dy\,dz$.	K3	5	5M

KL: Blooms Taxonomy Knowledge Level CO: Course Outcome M: Marks

***

NARASARAOPETA ENGINEERING COLLEGE (AUTONOMOUS)

I B.Tech I Semester Supple. Examinations, May-2026

Sub Code: R23CC1102 **INTRODUCTION TO PROGRAMMING**

Time: 3 hours (Common to All Branches) Max. Marks: 70

Note: Question Paper consists of Two parts (Part-A and Part-B)

PART-A

Answering all the questions from Part-A is compulsory (10 x 2M = 20M)

Q.No		Questions	KL	CO	M
1	a	Compare and contrast Algorithms and flowcharts	1	1	2M
	b	Give the value of the following C expression : 5 % 2	1	1	2M
	c	How *break* statement can be used in C loop structures?	1	2	2M
	d	Minimum how many number of times do…while will be executed	1	2	2M
	e	What is an *array*?	1	3	2M
	f	What is the C statement to declare an array to represent M x N matrix of integers.	1	3	2M
	g	State the significance of pointer variable in C.	1	4	2M
	h	What is *structure*?	1	4	2M
	i	Define Recursive function.	1	5	2M
	j	What is the value of N when statement was executed successfully N = printf("ABCDE")	1	5	2M

PART-B

Answer either 'a' or 'b' from each question of **PART-B** (5 x 10M = 50M)

Q.No		Questions	KL	CO	M
2		Unit-I			
	a	i) Draw and explain Basic organization of a computer	2	1	5M
		ii) What are the Basic data types in C? Explain with example.	2	1	5M
		OR			
	b	i) Explain Top-down approach Problem solving strategy.	2	1	5M
		ii) What are the derived data types in C? Explain with example.	2	1	5M
3		Unit-II			
	a	i) Give the syntax of *for* statement. Explain with an example to find sum of N given numbers.	3	2	5M
		ii) Give the syntax of if…else statement. Explain with an example.	3	2	5M
		OR			
	b	i) Give the syntax of *while* statement. Distinguish between *while* and *do.. while* statements	2	2	5M
		ii) Distinguish between *break* and *continue* statement. Give an example.	3	2	5M
4		Unit-III			
	a	i) Declare an array for to represent 10 strings. Write a program to read 10 strings in this array.	3	3	5M
		ii) What are the two dimensional arrays? Write a C program to fine sum two matrices of size: 4 X 5.	3	3	5M

	OR				
	b	i) What string manipulation functions in C? Explain.	2	3	5M
		ii) Write C program to find the length of a given string.	3	3	5M
5	Unit-IV				
	a	i) Explain how to declare a pointer Variable and how it can be used to assign an integer value. Give an example.	3	4	5M
		ii)Explain array manipulation using pointers	2	4	5M
	OR				
	b	i) Explain User-defined data types-*Structures* and *Unions* with example.	2	4	5M
		ii) Explain about pointer and address arithmetic in C. Give an example.	2	4	5M
6	Unit-V				
	a	i) Declare a function to swap values of two given variables as parameters of the function.	2	5	5M
		ii) Distinguish between *life* and *scope* of a variable with example.	2	5	5M
	OR				
	b	i) Explain about function declaration, function definition and function call with example.	3	5	5M
		ii) Explain file handling in C with example.	2	5	5M

KL: Blooms Taxonomy Knowledge Level CO: Course Outcome M: Marks

***

NARASARAOPETA ENGINEERING COLLEGE (AUTONOMOUS)

R23

I B.Tech I Semester Supple. Examinations, May-2026

Sub Code: R23CC1103 **COMMUNICATIVE ENGLISH**

Time: 3 hours (CSE, IT, CSE(AI)) Max. Marks: 70

Note: Question Paper consists of Two parts (Part-A and Part-B)

PART-A : Answering all the questions from Part-A is compulsory (10 x 2M = 20M)

Q.No		Questions	KL	CO	M
1	a	What did Della do with her hair and why?	K2	CO1	2M
	b	What is sequencing?	K2	CO2	2M
	c	Debrief the mood of the poem 'The Brook'.	K3	CO1	2M
	d	Sham lives ____ bread and butter _____ weeks while I keep fasting ____ special occasions _____ home. (**Fill the blanks with suitable prepositions**)	K3	CO3	2M
	e	How have Musk's business ventures attempted to transform the healthcare industry?	K3	CO1	2M
	f	**Fill in the blanks with suitable verb forms.** 1. Teena ---------(skip) breakfast every Sunday. 2. It -------(rain) for the past three days.	K3	CO3	2M
	g	What expectations did the children have from their uncle's toys?	K3	CO1	2M
	h	**Fill the blanks with the correct word.** 1. Elderly people became relatively ----------after COVID. (week/weak) 2. The class was --------during student presentations. (quite/quiet)	K4	CO4	2M
	i	What challenges can we overcome with interpersonal communication?	K3	CO1	2M
	j	**Correct the following sentences.** 1. None of my friends are interested in the proposal. 2. Neither the teacher or the student is responsible for the loss.	K4	CO3	2M

PART-B

Answer either 'a' or 'b' from each question of **PART-B** (5 x 10M = 50M)

Q.No		Questions	KL	CO	M
2		Unit-I			
	a	i)How do Jim's and Della's actions symbolize the strength of their love for each other?	K3	CO1	7M
		ii) **Rewrite the jumbled sentences in the correct order** 1. traumatic pains has she 2. spend together Sunday we 3. best I did my exam in	K3	CO3	3M
		OR			
	b	i) **Identify the parts of speech for the following sentences.** 1. This is a <u>beautiful</u> gift, although it is inexpensive. 2. Meera <u>writes</u> letters to all her friends now and then. 3. It has been raining <u>heavily</u> all night and the fields are full of water now. 4. I was late home <u>because</u> of the heavy traffic. 5. My cousin is a scientist at DRDO. <u>He</u> lives in Chennai.	K3	CO3	5M
		ii) **Write the antonyms for the following words.** 1. Sensible 2. Hostile 3AbandonIg 4. Ignore 5.Care	K3	CO4	5M

3		Unit-II			
	a	i) How does the poet's description of landscape, flowers, plants and color's in the poem make you feel as a reader? Substantiate your answer with examples from the poem.	K3	CO1	5M
		ii) Write a short paragraph of 120-150 words on the topic: **'AI – Does it empower or overpower humans.'**	K4	CO2	5M
		OR			
	b	i) **Fill the blanks with suitable articles**. 1. Could you get me ___ bunch of grapes, please? 2. There is ____ Ethiopian in our batch. 3. Is ____ teacher in the session? 4. I have ___ copy of Steve Job's biography. 5. Is ___ student still under suspension?	K3	CO1	5M
		ii) **Arrange the following sentences in the correct order.** 6. When the water begins to boil, add a teaspoonful of tea leaves to it and let it simmer for a minute. 7. Put a cup of water into a small pan. 8. Your tea is ready to enjoy. 9. Strain the tea and add half a cup of milk and sugar to taste. 10. Light the stove and place the pan on it.	K4	CO2	5M
4		Unit-III			
	a	i) In what way has Musk proved to be a visionary leader of cutting-edge technology? Discuss with relevant examples.	K4	CO3	7M
		ii) **Summarize the following paragraph** "Effective time management is crucial for students to succeed academically and maintain a balanced life. Prioritize tasks, create schedules, and allocate specific time slots for studying, activities, and relaxation. This practice helps in maximizing productivity, reducing stress, and achieving a better work-life balance. Avoid procrastination by breaking tasks into smaller, manageable segments and setting realistic goals. Learn to say no to distractions and utilize technology wisely for organizing schedules. Ultimately, mastering time management skills not only enhances academic performance but also instills lifelong habits that contribute to personal and professional success."	K4	CO3	3M
		OR			
	b	i) **Fill in the blanks with correct forms of the verbs in brackets** 1. He ___ (go) on jogging every day. 2. My mother is in the kitchen ___ (cook) continuously. 3. The students ___ (take) the industrial tour last week. 4. The NEET exam is ___ (postpone) to the next week. 5. I ____ (meet) with an accident just now.	K4	CO1	5M
		ii) **Correct the following sentences** 1. Everyone are happy about my success. 2. Either the President or the Secretary have written this letter. 3. Scissors are used to cut the subject. 4. I prefer coffee than tea. 5. When my father reached home, I am watching a movie.	K5	CO4	5M
5		Unit-IV			
	a	i) Do you think Harvey and Elizabeth's experiment failed? Justify your answer.	K4	CO2	7M

		ii) **Fill in the blanks with an appropriate word.** 1. She will ____ (relieve/reveal) from the post tomorrow. 2. Students have a good _____ with the Principal. (access/excess) 3. Have you ever watched someone ____ a brick? (break/brake)	K4	CO3	3M
	OR				
	b	i) Prepare a resume and a corresponding cover letter for the post of Scrum Master in Cognizant.	K6	CO2	5M
		ii)**Rewrite the following sentences as directed.** 1. The news channel briefed the incident. (change into passive voice) 2. Wheat is majorly grown in the western part of the world. (change into active voice) 3. Ram asked Mounika, "Why are you silent?" (change into indirect speech) 4. I told Nilaya, "Work hard to win!" (change into indirect speech) 5. Hasan said, "I am returning to Nagpur next Saturday." (change into indirect speech)	K4	CO3	5M
6	Unit-V				
	a	i) Reflect on the ways in which you can incorporate intrapersonal communication in your own life.	K3	CO1	7M
		ii) **Correct the errors in the following sentences.** 1. Everyone are responsible for the mistake. 2. You must practice to speak English 3. One of my friend is coming today	K4	CO3	3M
	OR				
	b	i) Write an essay on '**Post pandemic consequences on class room teaching'**.	K5	CO2	5M
		ii) **Read the paragraph and answer the given questions.** In the contemporary era, technology has become an integral part of our daily lives, influencing how we communicate, work, and engage with the world. The rapid advancements in technology have led to innovations such as smartphones, artificial intelligence, and the internet, transforming the way information is accessed and shared. While technology has brought about significant conveniences and efficiencies, it has also raised concerns about privacy, ethical use, and the potential for job displacement due to automation. As we navigate the digital landscape, it becomes crucial to strike a balance between harnessing the benefits of technology and addressing its potential drawbacks. 1. How has technology changed the way people communicate and access information in contemporary society? 2. What are some examples of technological innovations mentioned in the paragraph, and how do they impact daily life? 3. What are the potential concerns and challenges associated with the widespread use of technology, as highlighted in the paragraph? 4. In what ways has technology contributed to increased efficiency and convenience for individuals and businesses? 5. How might the ethical considerations of technology, such as privacy issues and the impact on employment, be addressed in order to ensure responsible use?	K6	CO4	5M

KL: Blooms Taxonomy Knowledge Level CO: Course Outcome M: Marks

NARASARAOPETA ENGINEERING COLLEGE (AUTONOMOUS)

I B.Tech I Semester Supple. Examinations, May-2026

R23

Sub Code: R23CC1104 **BASIC CIVIL AND MECHANICAL ENGINEERING**

Time: 3 hours (CSE, IT, AI) Max. Marks: 70

PART-A

(CE)

Q.No		Questions	KL	CO	M
1	a	What is geotechnical engineering	K1	CO1	1M
	b	Write two objectives of surveying	K1	CO2	1M
	c	What are the different modes of transportation?	K1	CO3	1M
	d	What are the dimensions of a standard brick?	K1	CO1	1M
	e	What is meant by contour interval?	K1	CO2	1M
2		Unit-I			
	a	i) Explain any 5 types of cement and its uses.	K2	CO1	5M
		ii) Briefly explain about aggregates used in construction.	K2	CO1	5M
		OR			
	b	i) Briefly discuss the different types of steel used in construction.	K2	CO1	5M
		ii) Briefly explain about good qualities of bricks and their classification.	K2	CO1	5M
		Unit-II			
3	a	What are the different types of instruments used in chain surveying? Explain in detail.	K2	CO2	10 M
		OR			
	b	Differentiate between deflection angle method and included angle method.	K2	CO2	10 M
		Unit-III			
4	a	Differentiate between Flexible Pavements and Rigid Pavements with a neat sketch	K2	CO3	10 M
		OR			
	b	i) What is a Dam? Discuss their types.	K2	CO3	5M
		ii) What is a reservoir? Briefly explain about their types.	K2	CO3	5M

PART-B

(ME)

Q.No		Questions	KL	CO	M
5	a	Define Composite materials	K1	CO4	1M
	b	Define Joining processes	K1	CO5	1M
	c	Mention any two application of robots	K1	CO6	1M
	d	Define Machining processes.	K1	CO5	1M
	e	Define Gear Drives	K1	CO6	1M
6		Unit-IV			
	a	i) Differentiate between Ferrous and Non-ferrous materials explain briefly.	K2	CO4	5M
		ii) Classify different types of composites	K2	CO4	5M
		OR			
	b	Explain about the various Mechanical Engineering technologies in Aerospace and Energy Sectors	K2	CO4	10 M
		Unit-V			
7	a	i) Explain about refrigeration and air conditioning cycles.	K2	CO5	5M
		ii) Explain the components of electrical Vehicles.	K2	CO5	5M
		OR			
	b	i) Explain the working Principle of a 4-stroke C.I. Engine. With neat sketch?	K2	CO5	5M
		ii) Explain the working of a CNC machine. With neat sketch?	K2	CO5	5M
		Unit-VI			
8	a	i)Whar are the different types of belt drives. Explain	K2	CO6	5M
		ii) Explain the different types of Robot Configurations	K2	CO6	5M
		OR			
	b	i) Explain the working principle of Nuclear power plant	K2	CO6	10 M

KL: Blooms Taxonomy Knowledge Level CO: Course Outcome M: Marks

***

NARASARAOPETA ENGINEERING COLLEGE (AUTONOMOUS)

I B.Tech I Semester Supple. Examinations, May-2026

Sub Code: R23CC1105 **CHEMISTRY**

Time: 3 hours Max. Marks: 70

Note: Question Paper consists of Two parts (Part-A and Part-B)

PART-A

Answering all the questions from Part-A is compulsory (10 x 2M = 20M)

Q.No		Questions	KL	CO	M
1	a	Differentiate bonding and antibonding molecular orbitals.	2	1	2M
	b	Explain the magnetic character of O_2 molecule.	2	1	2M
	c	Discuss the principle of zone refining process.	2	2	2M
	d	State the properties of graphenes nanoparticles.	1	2	2M
	e	Explain electrochemical sensors.	2	3	2M
	f	What are primary cells?	1	3	2M
	g	What are elastomers? Give examples.	1	4	2M
	h	Explain bio-degradable polymers.	2	4	2M
	i	What is meant by absorbance and transmittance?	1	5	2M
	j	Mention the range of UV- Vis and IR region in electromagnetic spectrum.	1	5	2M

PART-B

Answer either 'a' or 'b' from each question of **PART-B** (5 x 10M = 50M)

Q.No		Questions	KL	CO	M
2		Unit-I			
	a	i) Discuss types of hydrogen bonding.	2	1	5M
		ii) Draw and explain MO diagram for CO molecule.	3	1	5M
		OR			
	b	i) Explain the conditions for linear combination of atomic orbitals.	2	1	5M
		ii) Discuss π- molecular orbital energy level diagram of benzene.	2	1	5M
3		Unit-II			
	a	i) Explain Czochralski method for preparation of semiconducting material.	2	2	5M
		ii) Discuss applications of superconductors.	2	2	5M
		OR			
	b	i) Discuss classification of supercapacitors.	2	2	5M
		ii) Explain arc discharge method for preparation of nanomaterials.	2	2	5M
4		Unit-III			
	a	i) Discuss conductometric titrations.	2	3	5M
		ii) Explain working of lithium ion and its applications.	2	3	5M

	OR				
	b	i) Discuss working of the hydrogen-oxygen fuel cell.	3	3	5M
		ii) Explain applications of electrochemical series.	2	3	5M
5	Unit-IV				
	a	i) Discuss coordination polymerization.	2	4	5M
		ii) Explain properties and applications of PVC and Bakelite.	2	4	5M
	OR				
	b	i) Explain injection moulding method for preparation of plastics.	2	4	5M
		ii) Discuss mechanism of conduction in polyacetylene.	2	4	5M
6	Unit-V				
	a	i) Derive Beer- Lambert Law.	3	5	5M
		ii) Explain types of transitions in UV spectroscopy.	2	5	5M
	OR				
	b	i) Explain instrumentation in IR.	3	5	5M
		ii) Discuss applications of NMR Spectroscopy.	2	5	5M

KL: Blooms Taxonomy Knowledge Level CO: Course Outcome M: Marks

***

NARASARAOPETA ENGINEERING COLLEGE (AUTONOMOUS)

I B.Tech I Semester Supple. Examinations, May-2026

Sub Code: R23CC1106 **ENGINEERING PHYSICS**

Time: 3 hours (CE,EEE,ME,ECE,CSE(AIML),DS,CS,AIML) Max. Marks: 70

Note: Question Paper consists of Two parts (Part-A and Part-B)

PART-A

Answering all the questions from Part-A is compulsory (10 x 2M = 20M)

Q.No		Questions	KL	CO	M
1	a	Describe any two properties of laser radiation.	2	1	2M
	b	Calculate the divergence of light beam issuing out by He-Ne laser which produces spot diameters of 4mm and 6mm at 1m and 2m distances respectively.	5	1	2M
	c	What is Basis, illustrate with an example.	4	2	2M
	d	A crystal plane of a lattice intercepts the principal axes at 3a, 4b and 2c, (where a, b and c are primitive vectors) respectively. Calculate the Miller indices of a plane.	5	2	2M
	e	Explain any two important properties of superconductors.	2	3	2M
	f	Discuss the medical applications of superconductors.	6	3	2M
	g	What are the demerits of classical free electron theory of metals?	4	4	2M
	h	Confer the properties of $\lvert\psi\rvert^2$ in quantum mechanics.	6	4	2M
	i	Draw the band energy diagram of Intrinsic, n-type and p-type semiconductors.	2	5	2M
	j	Mention the materials exhibiting the piezoelectric properties.	4	5	2M

PART-B

Answer either 'a' or 'b' from each question of **PART-B** (5 x 10M = 50M)

Q.No			Questions	KL	CO	M
2	Unit-I					
	a	i)	Explain the construction of ruby laser. Discuss its working using an energy level diagram.	2	1	5M
		ii)	Differentiate step index and graded index fibers.	4	1	5M
	OR					
	b	i)	Derive the Einstein's coefficients and obtain the relation between them.	5	1	5M
		ii)	Define acceptance angle and acceptance cone and derive an expression for the numerical aperture of an optical fiber.	5	1	5M
3	Unit-II					
	a	i)	Define atomic packing factor (APF). Prove that $APF_{SC}<APF_{BCC}<APF_{FCC}$.	5	2	5M
		ii)	Derive Bragg's condition for maximum diffraction of X-rays from crystalline solid.	5	2	5M
	OR					
	b	i)	What are Bravais lattices and discuss different types of lattices based on unit cell parameters.	4	2	5M

		ii)	Derive the relation between Miller indices of a plane and interplanar distance.	5	2	5M
4	Unit-III					
	a	i)	Differentiate soft and hard ferromagnetic materials based on Hysteresis.	4	3	5M
		ii)	Classify the type-I and type-II superconductors with an example.	4	3	5M
	OR					
	b	i)	Describe diamagnetic and ferromagnetic materials based on intensity of magnetization, susceptibility and temperature.	3	3	5M
		ii)	Discuss the postulates of BCS theory of superconductivity and how it proves the various property of supercodncutivity.	2	3	5M
5	Unit-IV					
	a	i)	Derive the Schrodinger time independent wave equation for a free particle.	3	4	5M
		ii)	Discuss the importance of Fermi-Dirac distribution function (f(E)). Define Fermi energy and prove that $f(E)=\begin{cases} 1, E<E_F \\ 0, E>E_F \\ 0.5, E=E_F \end{cases}$	2	4	5M
	OR					
	b	i)	Derive the electrical conductivity of metals based on classical free electron theory.	3	4	5M
		ii)	Assuming Schrodinger wave equation, Derive the energy level and probability density function for a particle in a potential well for the first three energy levels.	3	4	5M
6	Unit-V					
	a	i)	Differentiate drift and diffusion currents. Derive the expression for drift and diffusion current density and mention the Einstein relation between these processes.	3	5	5M
		ii)	State and explain Hall effect and derive the relation between Hall coefficient and Hall voltage.	2	5	5M
	OR					
	b	i)	Discuss the properties of magneto rheological fluids- electro rheological fluids and mention its applications.	2	5	5M
		ii)	Discuss the properties of shape memory alloys. Mention its medical and engineering applications.	2	5	5M

KL: Blooms Taxonomy Knowledge Level CO: Course Outcome M: Marks

***

NARASARAOPETA ENGINEERING COLLEGE (AUTONOMOUS)

I B.Tech I Semester Supple. Examinations, May-2026

R23

Sub Code: R23CC1107 **BASIC ELECTRICAL & ELECTRONICS ENGINEERING**

Time: 3 hours (CE,EEE,ME,ECE,CSE(AIML),DS,CS,AIML) Max. Marks: 70

PART-A

(EEE)

Q.No		Questions	KL	CO	M
1	a	Write the limitations of ohms law?	1	1	1M
	b	Write the function of DC motors?	1	2	1M
	c	Define on electrical unit?	1	3	1M
	d	What is meant by capacitance?	1	1	1M
	e	What is meant by electric shock?	1	3	1M
2		Unit-I			
	a	State and prove super position theorem for the 'T' type electrical network excited with two equal DC sources?	3	1	10M
		OR			
	b	A resistance of 17.8 ohms is connected in series with two resistances each of 32.6 ohms arranged in parallel. A voltage source of 38.7V is connected to this circuit. Calculate the current drawn from the source and find the resistance should be connected in parallel with the parallel combination in order that the current drawn from the source is 1.8A? Draw the relevant circuit diagram also.	3	1	10M
		Unit-II			
3	A	Draw neat diagram and explain in detail about the constructional aspects of single phase transformer?	2	2	10M
		OR			
	b	Explain in detail about the construction of PMMC instrument and compare with MI type instrument?	2	2	10M
		Unit-III			
4	a	Draw the block diagram and explain in detail about the power generation by using wind energy?	2	3	10M
		OR			
	b	Explain the working of miniature circuit breaker with neat diagram?	2	3	10M

PART-B

(ECE)

Q.No		Questions	KL	CO	M
5	a	What is meant by vacuum tubes?	1	1	1M
	b	Define amplifier?	1	2	1M
	c	What is the function of AND gate?	1	3	1M
	d	Short notes on nano electronics?	1	1	1M
	e	Writ e function of OR gate?	1	3	1M
6		Unit-IV			
	a	Compare the input output characteristics of CB, CE and CC amplifiers with circuit diagrams?	3	1	10M
		OR			
	b	Derive the characteristics of PN junction diode and also analyse the characteristics of zener diode?	3	1	10M
		Unit-V			
7	a	Describe the working of public address system with neat block diagram and write the applications?	2	2	10M
		OR			
	b	Draw the block diagram and explain in detail about the electronic instrumentation system and write the applications?	2	2	10M
		Unit-VI			
8	a	Compare the features of S-R, J-K, and D flip flops with diagrams?	4	3	10M
		OR			
	b	Compare the properties of Ripple counter, binary counter and ring counters?	4	3	10M

KL: Blooms Taxonomy Knowledge Level CO: Course Outcome M: Marks

***

NARASARAOPETA ENGINEERING COLLEGE (AUTONOMOUS)

I B.Tech I Semester Supple. Examinations, May-2026

R23

Sub Code: R23CC1108 **ENGINEERING GRAPHICS**

Time: 3 hours (CE, EEE, ME, ECE, CSE (AIML), DS, CS, AIML) Max. Marks: 70

Note: Answer All **FIVE** Questions.

All Questions Carry Equal Marks (5 X 14 = 70M)

Q.No		Questions	KL	CO	M
1		Unit-I			
	a	The major and minor axes of an ellipse are 120 mm and 80 mm respectively. Construct an ellipse by rectangle method.	**K3**	**CO1**	14M
		OR			
	b	Construct a diagonal scale of R.F=1/4000 to show metres and long enough to measure upto 500 metres. Mark a length of 352 meters on it.	**K2**	**CO1**	14M
2		Unit-II			
	a	A line AB of 70 mm long has its end A at 10 mm above H.P and 15 mm in front of V.P. Its front view and top view measure 50 mm and 60 mm respectively. Draw the projections of the line and determine its inclinations with H.P. and V.P. Locate the traces of the line.	**K3**	**CO2**	14M
		OR			
	b	A thin hexagonal plate of 35mm side has a central equilateral triangle hole of side equal to that of the plate. The plate is kept in such a way that one of its edges is parallel to the ground and inclined at 30^0 to the VP. The plate makes 45^0 with ground. Draw the projections of the plate and the hole. A side of the hole is parallel to the ground	**K4**	**CO2**	14M
3		Unit-III			
	a	Draw the projections of a cylinder of diameter of base 60mm and height 90mm when its axis is making an angle of 30^0 to the H.P. and parallel to the V.P.	**K3**	**CO3**	14M
		OR			
	b	A square pyramid, base 40 mm side and axis 80 mm long, has a triangular face on the ground and the vertical plane containing the axis makes an angle of 45^0 with the VP. Draw its projections..	**K4**	**CO3**	14M
4		Unit-IV			
	a	A cube of 35 mm long edges is resting on the H.P. on one of its faces with a vertical face inclined at 30° to the V.P. It is cut by a section plane parallel to the V.P. and 9 mm away from the axis and further away from the V.P. Draw its sectional front view and the top view.	**K4**	**CO4**	14M
		OR			
	b	Develop the complete surface of a square prism of side of base 50 mm and height 90 mm.	**K3**	**CO4**	14M
5					

		Unit-V			
	a	Draw isometric view for the given orthographic projections.All dimensions are in mm 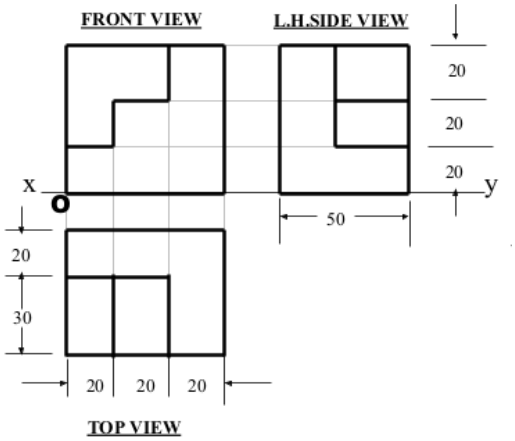	**K4**	**CO5**	14M
		OR			
	b	Draw the (i) Front view (ii) Top view and (iii) Side view for the following figure. All dimensions are in mm 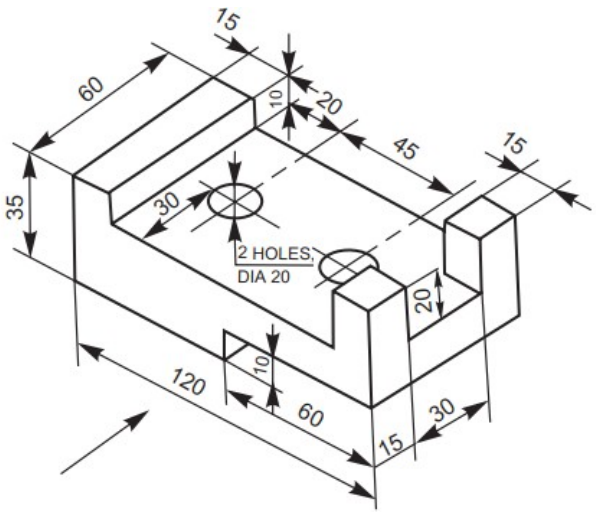	**K4**	**CO5**	14M

KL: Blooms Taxonomy Knowledge Level CO: Course Outcome M:Marks

***